GENERAL NOTES	S.NO.	REV.	DATE	DESCRIPTION
1. ALL DIMENSIONS ARE IN MM 4.DRG. NOT TO BE SCALED				
2. REMOVE SHARP CORNERS 5.IF IN DOUBT PLEASE ASK				
3. AVOID RUST,DUST&SCRATCH				

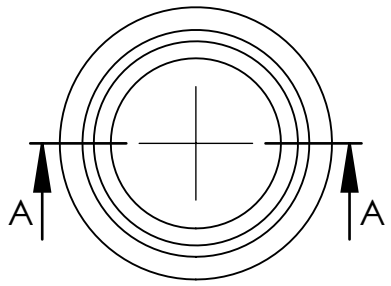

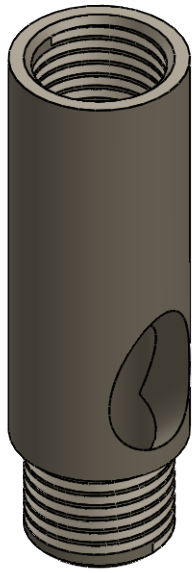

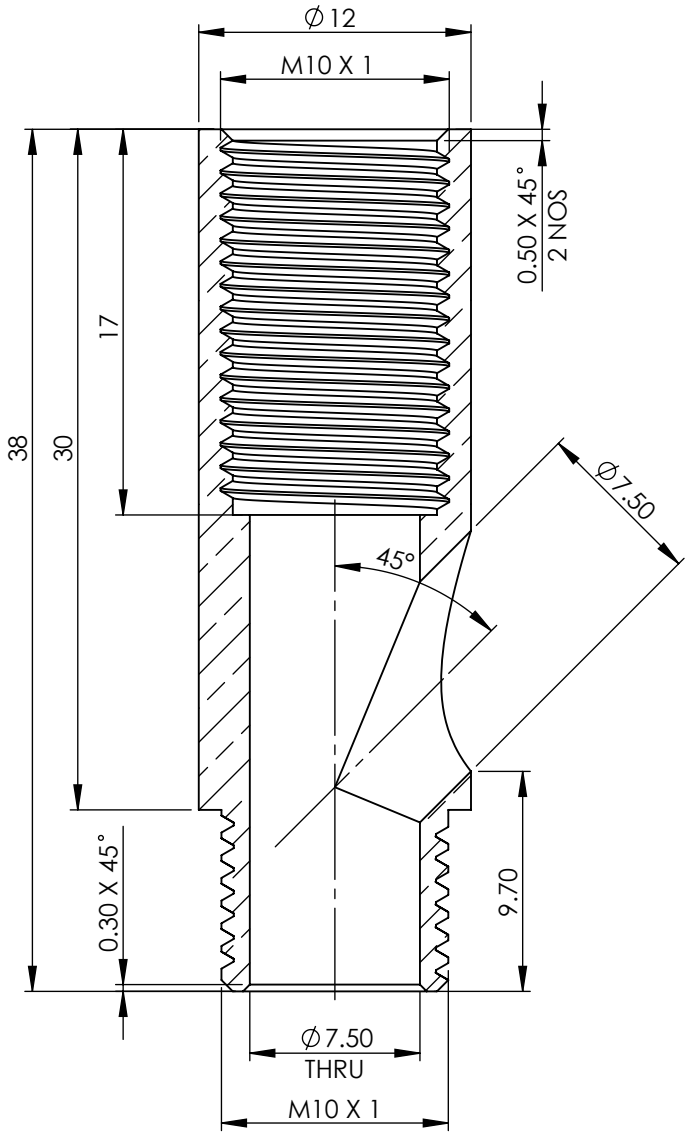

SECTION A-A
SCALE 3 : 1

Sheet 1 of 1

GENERAL TOLERANCE WHERE NOT SPECIFIED		
LINEAR:	1 TO 6mm	±0.1
	ABOVE 6mm	±0.2
ANGULAR:		±1°

PART NAME : **POWER FEED TUBE** **REF.NO:GPPF-105**

MATERIAL : **BRASS-ROHS (BRIGHT NICKEL PLATED)**

GENERAL TOLERANCE WHERE NOT SPECIFIED AS ABOVE

SCALE 3:1

DRN.		DATE	
CHKD.		DATE	
APPD.		DATE	
MKT.		DATE	
DRG. NO.	**13-6131**		

GOLDEN PEAKOCK OVERSEAS LIMITED
20-A, NSEZ, NOIDA (INDIA)

DATE 15/03/2021

NET WEIGHT :- 14.36gm. REVISION NO. 00 - ITEM CODE : **0788600**

Golden peakock ovrs ltd reserve all rights in this document and in the information contained therein. Reproduction, use or disclosure to third parties without written authorization is strictly forbidden